BER-VAC

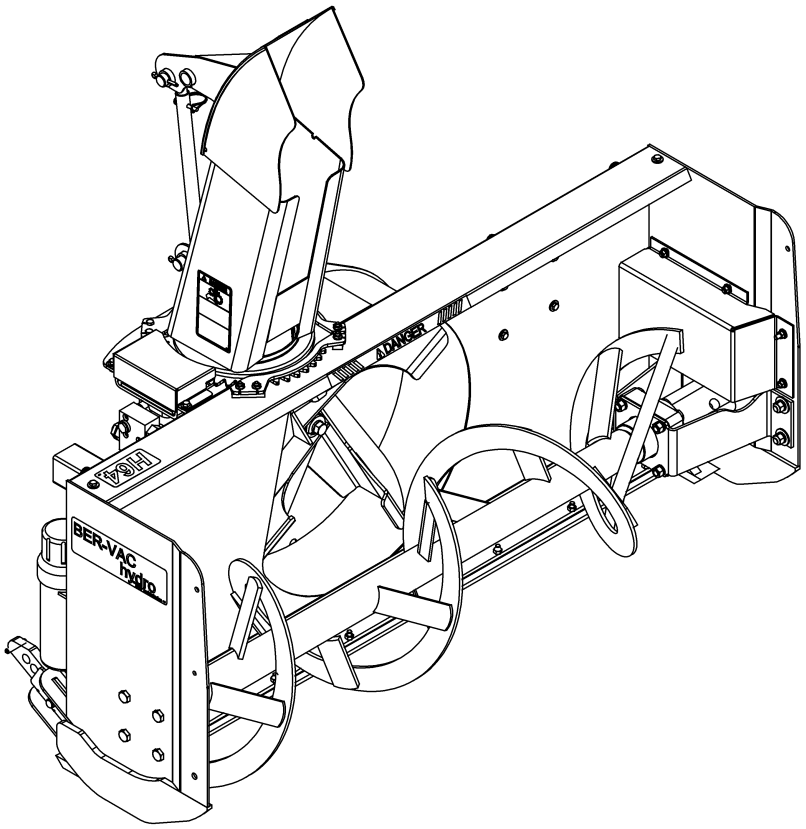

PARTS MANUAL

64" HYDRAULIC SNOWBLOWER – H64A
76" HYDRAULIC SNOWBLOWER – H76A
84" HYDRAULIC SNOWBLOWER – H84A

SERIAL NO. 21000000 AND UP

INTERTEK
ISO 9001:2000

PM 0303SB-A
01/15

TABLE OF CONTENTS

TABLE OF CONTENTS 1
INTRODUCTION 2
PARTS 3
Decals 3
Hydraulic block assembly – 3920030 5
Hydraulic snowblower H64A 6
Hydraulic snowblower H76A & H84A 8
Hydraulic system H64A 10
Hydraulic system H76A-H84A 11
Chute – For H64A 12
Chute – For H76A & H84A 13
Hydraulic rotation 14
Hydraulic valve for chute rotation – 8183A 15
Hydraulic valve for hydraulic deflector – 8184A 16
Universal hitch – 8153 18
Drift cutters – 8152 19
Electric deflector – 8154 20
Switch box kit- 669285 21
Hydraulic motors – 3910021, 3910022, 3910058 & 3910059 22
WARRANTY 24
TORQUE SPECIFICATION TABLE 25
ADAPTER INSTALLATION PROCESS 26

INTRODUCTION

All parts are illustrated in "exploded views" which show the individual parts in their normal relationship to each other. Reference numbers are used in the illustrations. These numbers correspond to those in the "Reference Number" (REF) column, and are followed by the description and quantity required.

O/L - "Obtain Locally" in the part number column indicates common hardware that is available at your local hardware supply.

Right hand and left hand are determined by those seen by the conductor standing behind the equipment.

Orders must give the complete description, correct part number, the total amount required, the serial number, the method of shipment and the shipping address.

The manufacturer reserves the rights to change, modify, or eliminate from time to time, for technical or other reasons, certain or all data, specifications, or the product or products themselves, without any liability or obligation.

The parts listed here are available through your local dealer.

MANUAL HOLDER – ALL MODELS

REF.	DESCRIPTION	QTÉ	# PIÈCE
1	Manual holder	1	4200036
2	Bolt hex. 5/16" NC x 3/4" lg gr. 5, PTD	2	O/L
3	Nut nylon insert 5/16" NC, PTD	2	O/L

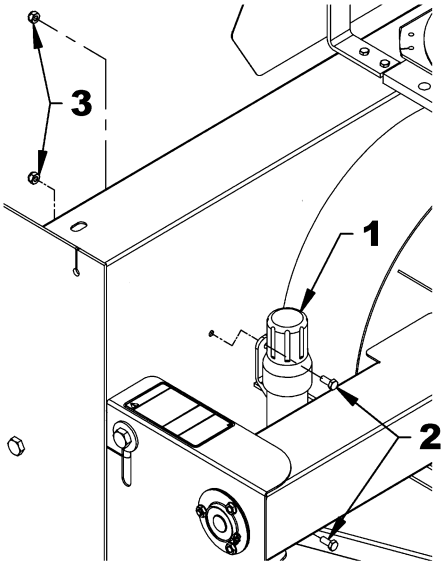

PARTS

DECALS

Replace immediately if damaged
For H64A snowblower

656779

660988

660989

2500330

656780

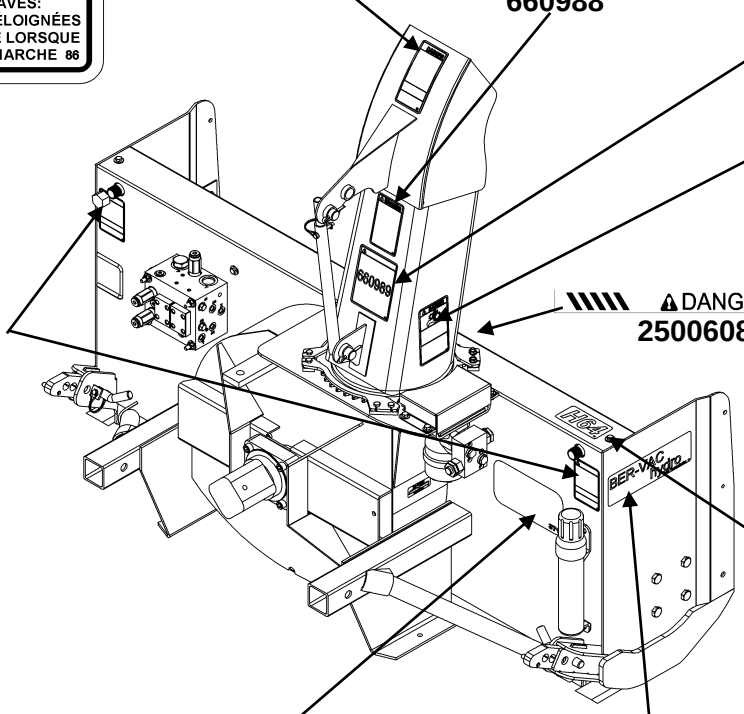

DANGER

2500608

2500311

2500315

2500308

Replace immediately if damaged
For H76A & H84A snowblowers

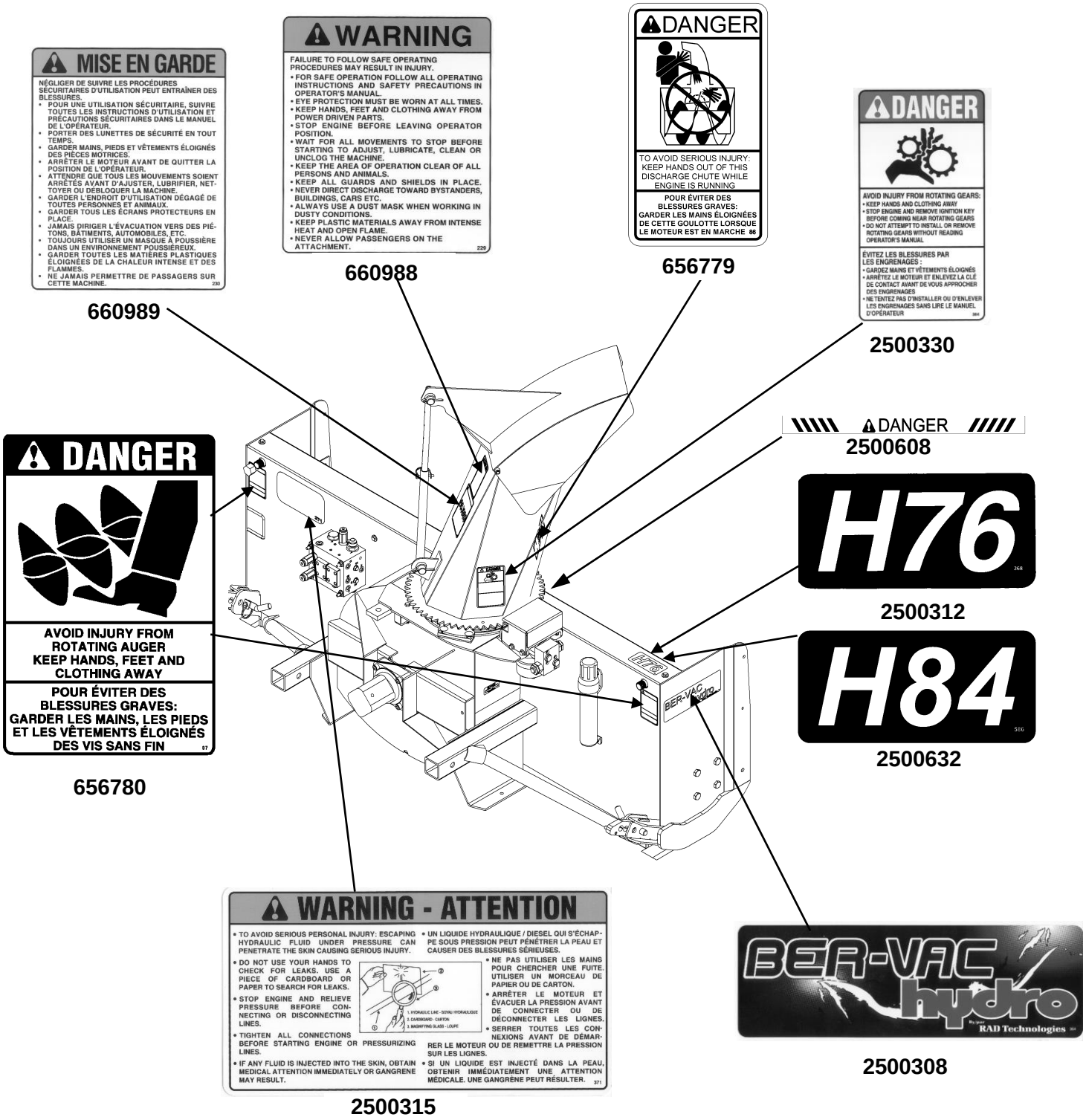

HYDRAULIC BLOCK ASSEMBLY – 3920030

REF.	DESCRIPTION	QTY	PART #
1	Hydraulic block	1	3920027
2	Cover	2	3920028
3	O-ring 0.07" x 3/8" x 1/2" ext	8	3900462
4	Pressure restrictor preset @ 2000 PSI	1	3900457
5	Pressure restrictor preset @ 3000 PSI	1	3900458
	Seal kit for 3900457 et 3900458	2	3900459
6	4 way sequential valve preset @ 1700 PSI	1	3900460
	Seal kit for 3900460	1	3900461
7	Hydraulic male cap 7/16" ORB	1	2600213
8	Hydraulic male cap 9/16" ORB	6	2600212
9	Flow restrictor 0.0781" hole	2	669269
10	Flow restrictor 0.0935" hole	1	665942
11	Bolt hex. 5/16 NC x 5" gr.5, PTD	4	0100033
12	Allen socket head cap screw 10-24 NC x 7/8" gr.5 black, cylindr.	8	0800047
13	Nylon insert locknut 5/16 NC, PTD	4	1000005
14	Flat washer 5/16" (3/8" int), PTD	8	1400003

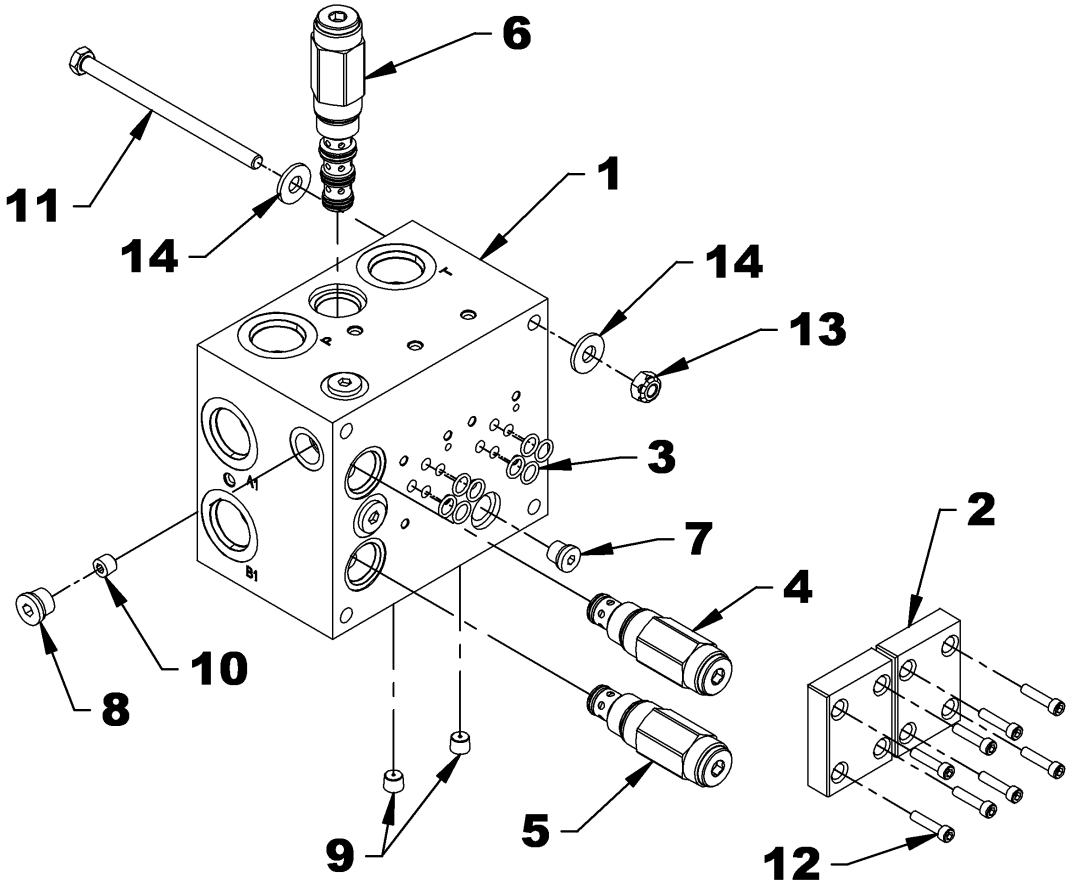

HYDRAULIC SNOWBLOWER H64A

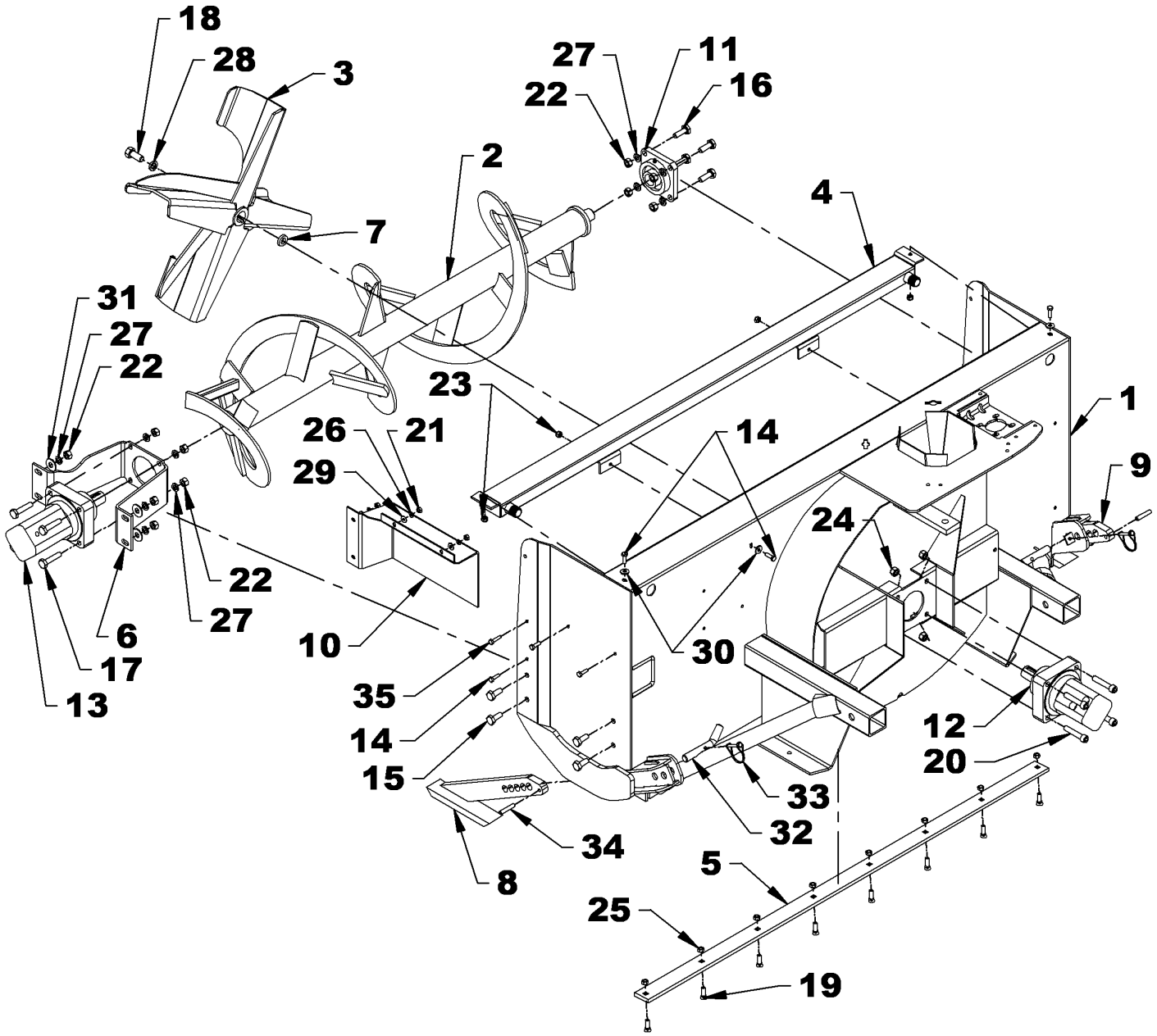

HYDRAULIC SNOWBLOWER H64A

REF.	DESCRIPTION	QTY	PART #
1	Housing	1	-----
2	Auger	1	669292
3	Fan	1	669290
4	Oil cooler	1	669291
5	Cutting edge	1	669305
6	Motor support	1	669139
7	Spacer	1	669357
8	Right skid shoe	1	669020
9	Left skid shoe	1	669021
10	Hose guard	1	669145
11	Flange bearing 1 1/4", 4 holes	1	4300118
12	Hydraulic motor 89cc without valve	1	3910058
13	Hydraulic motor 293cc without valve	1	3910059
14	Bolt hex. 5/16" NC x 1" gr.5, PTD	7	0100019
15	Bolt hex. 1/2" NC x 1 1/4" gr.5, PTD	4	0100069
16	Bolt hex. 1/2" NC x 1 1/2" gr.5, PTD	4	0100070
17	Bolt hex. 1/2" NC x 2 1/4" gr.5, PTD	4	0100075
18	Bolt hex. 5/8" NF x 1 1/2" gr.5, PTD	1	0100240
19	Plow bolt 3/8" NC x 1 1/4" Gr.5 PTD	8	0400002
20	Allen socket head cap screw 1/2 NC x 2 1/2" Gr.5 black, cylind.	4	0800021
21	Nut hex. 5/16" NC	4	0900002
22	Nut hex. 1/2" NC	12	0900006
23	Nylon insert locknut 5/16-18NC PTD	4	1000005
24	Nylon insert locknut 1/2"-13NC PTD	4	1000011
25	Stover locknut 3/8" NC PTD	8	1100003
26	Lockwasher 5/16" PTD	4	1200003
27	Lockwasher 1/2" PTD	12	1200006
28	Lockwasher 5/8" PTD	1	1200007
29	Flat washer 1/4" (5/16" int) PTD	4	1400002
30	Flat washer 5/16" (3/8" int) PTD	4	1400003
31	Flat washer 1/2" (9/16" int) PTD	4	1400006
32	Pin for skid shoe	2	667899
33	Round wire lock pin 1/4" X 1 3/4"	2	1900006
34	Spring pin dia. 3/8" X 2" lg	2	1600024
35	Bolt hex. 5/16" NC x 1 1/4" gr.5, PTD	1	0100020

HYDRAULIC SNOWBLOWER H76A & H84A

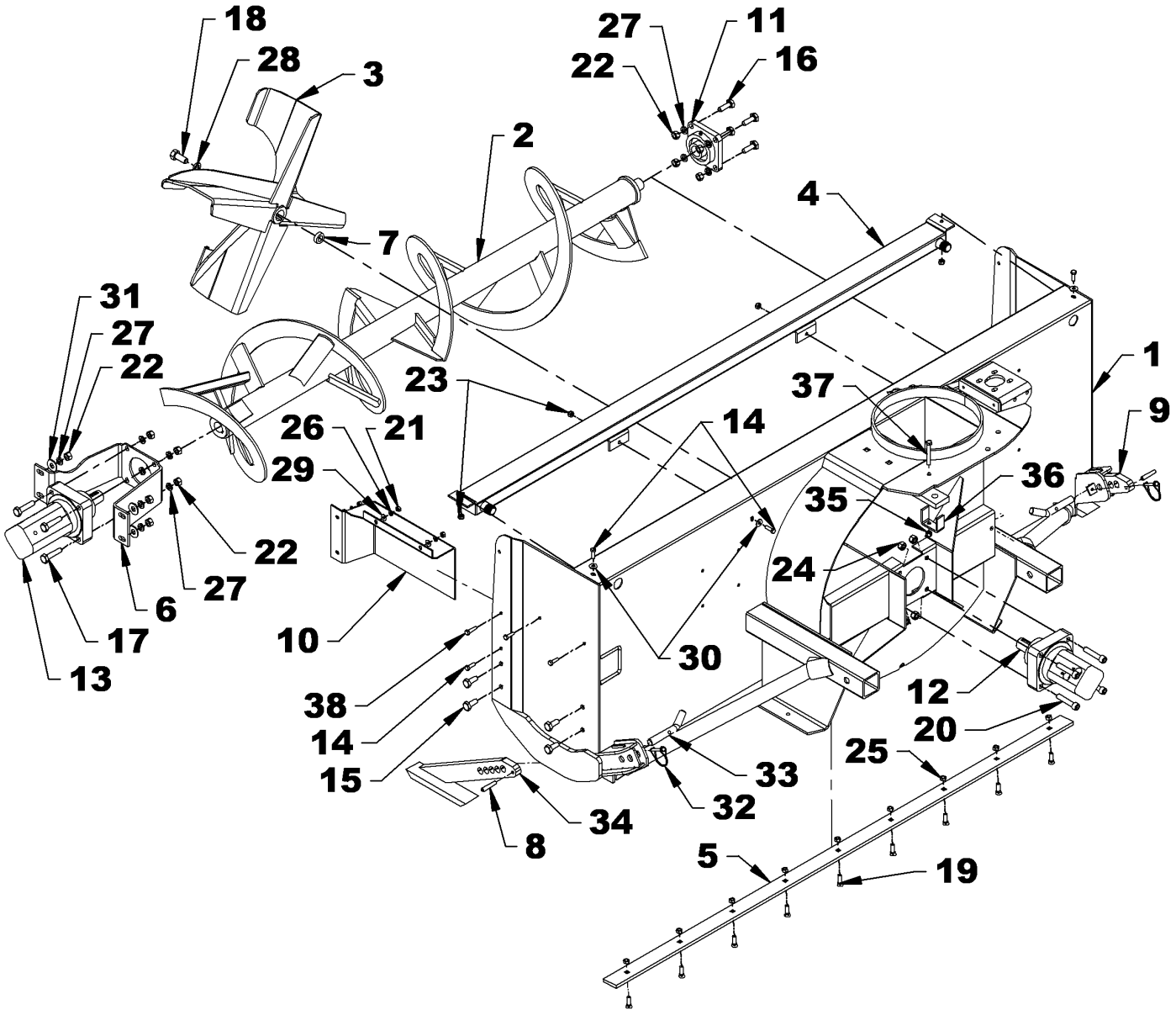

HYDRAULIC SNOWBLOWER H76A & H84A

REF.	DESCRIPTION	QTY	PART #
1	Housing **H76A**	1	-----
	Housing **H84A**	1	-----
2	Auger **H76A**	1	669141
	Auger **H84A**	1	669304
3	Fan	1	669138
4	Oil cooler	1	669137
5	Cutting edge **H76A**	1	669306
	Cutting edge **H84A**	1	669307
6	Motor support	1	669139
7	Spacer	1	669140
8	Left skid shoe	1	669020
9	Right skid shoe	1	669021
10	Hose guard	1	669145
11	Flange bearing 1 1/4", 4 holes	1	4300118
12	Hydraulic motor 127cc without valve	1	3910021
13	Hydraulic motor 409cc without valve	1	3910022
14	Bolt hex. 5/16" NC x 1" gr.5, PTD	7	0100019
15	Bolt hex. 1/2" NC x 1 1/4" gr.5, PTD	4	0100069
16	Bolt hex. 1/2" NC x 1 1/2" gr.5, PTD	4	0100070
17	Bolt hex. 1/2" NC x 2 1/4" gr.5, PTD	4	0100075
18	Bolt hex. 5/8" NF x 1 1/2" gr.5, PTD	1	0100240
19	Plow bolt 3/8" NC x 1 1/4" Gr.5 PTD for **H76A**	9	0400002
	Plow bolt 3/8" NC x 1 1/4" Gr.5 PTD for **H84A**	10	0400002
20	Allen socket head cap screw 1/2 NC x 2 1/2" Gr.5 black, cylind.	4	0800021
21	Nut hex. 5/16" NC	4	0900002
22	Nut hex. 1/2" NC	12	0900006
23	Nylon insert locknut 5/16-18NC PTD	4	1000005
24	Nylon insert locknut 1/2"-13NC PTD	4	1000011
25	Stover locknut 3/8" NC PTD for **H76A**	9	1100003
	Stover locknut 3/8" NC PTD for **H84A**	10	1100003
26	Lockwasher 5/16" PTD	4	1200003
27	Lockwasher 1/2" PTD	12	1200006
28	Lockwasher 5/8" PTD	1	1200007
29	Flat washer 1/4" (5/16" int) PTD	4	1400002
30	Flat washer 5/16" (3/8" int) PTD	4	1400003
31	Flat washer 1/2" (9/16" int) PTD	4	1400006
32	Pin for skid shoe	2	667899
33	Round wire lock pin 1/4" X 1 3/4"	2	1900006
34	Spring pin dia. 3/8" X 2" lg	2	1600024
35	Nylon insert locknut 3/8" NC	2	1000006
36	Hose support	1	669144
37	Bolt hex. 3/8" NC x 2 3/4" gr.5, PTD	1	0100045
38	Bolt hex. 5/16" NC x 1 1/4" gr.5, PTD	1	0100020

Hydraulic System H64A

REF.	DESCRIPTION	QTY	PART #
1	Hydraulic block 2 covers included	1	3920030
2	Hose 3/4" x 25" lg	2	3700173
3	Hose 3/4" x 33" lg	2	3700159
4	Hose 3/4" x 59" lg	1	3700160
5	Hose 1/4" x 30 1/4" lg	2	3700164
6	Elbow 45° 1 1/16" ORB M X 1 1/16" JIC M	2	2600184
7	Plastic guard for hoses 10"	1	669154
8	Hydraulic plug 7/16 ORB	4	2600048
9	Hydraulic plug 1 1/16-20 ORB	1	2600049
10	Female Hydraulic plug 1 1/16"-12 JIC 37°	1	2600183
11	Fitting 7/8" ORB M x 1 1/16" JIC M	4	2600058
12	Elbow 90º 7/16 ORB M x 7/16 JIC M	3	2600065
13	Adapter 7/16"JIC M X 7/16"ORB M	1	2600123
14	Adapter 3/4"NPT F x 1 1/16" JIC M	2	2600203
15	Union 1 1/16" JIC M x 1 1/16 ORB M	3	660571
16	Oil cooler	1	669291

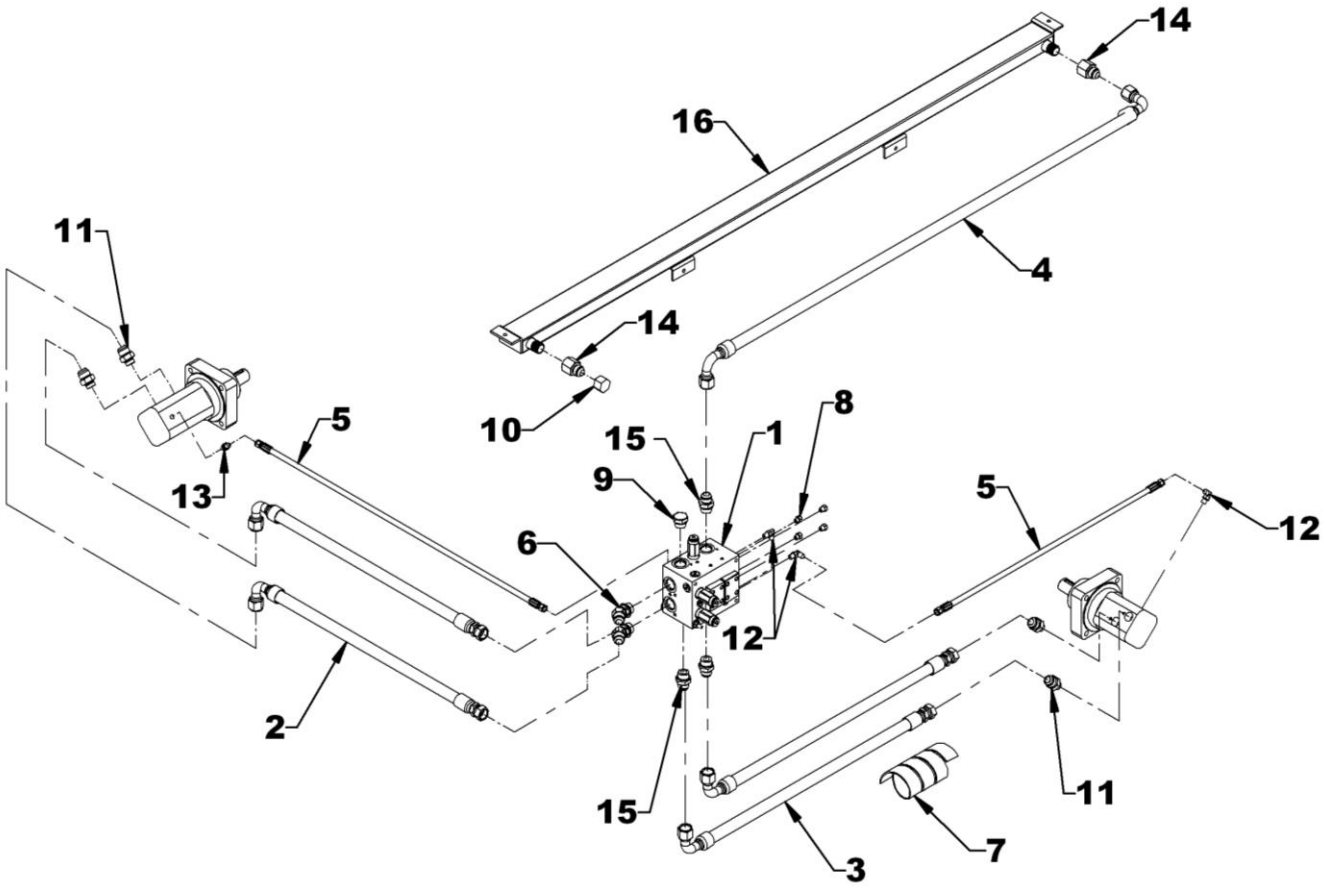

HYDRAULIC SYSTEM H76A-H84A

REF.	DESCRIPTION	QTY	PART #
1	Hydraulic block 2 covers included	1	3920030
2	Hose 3/4" x 30 1/2" lg for **H76A**	2	3700158
	Hose 3/4" x 34 1/2" lg for **H84A**	2	3700174
3	Hose 3/4" x 33" lg	2	3700159
4	Hose 3/4" x 59" lg	1	3700160
5	Hose 1/4" x 38 1/2" lg for **H76A**	1	3700163
	Hose 1/4" x 42 1/2" lg for **H84A**	1	3700175
6	Hose 1/4" x 30 1/4" lg	1	3700164
7	Plastic guard for hoses 4"	1	669152
8	Plastic guard for hoses 10"	1	669154
9	Hydraulic plug 7/16 ORB	4	2600048
10	Hydraulic plug 1 1/16-20 ORB	1	2600049
11	Female Hydraulic plug 1 1/16"-12 JIC 37°	1	2600183
12	Fitting 7/8" ORB M x 1 1/16" JIC M	4	2600058
13	Elbow 90º 7/16 ORB M x 7/16 JIC M	3	2600065
14	Adapter 7/16"JIC M X 7/16"ORB M	1	2600123
15	Adapter 3/4"NPT F x 1 1/16" JIC M	2	2600203
16	Union 1 1/16" JIC M x 1 1/16 ORB M	5	660571
17	Oil cooler	1	669137

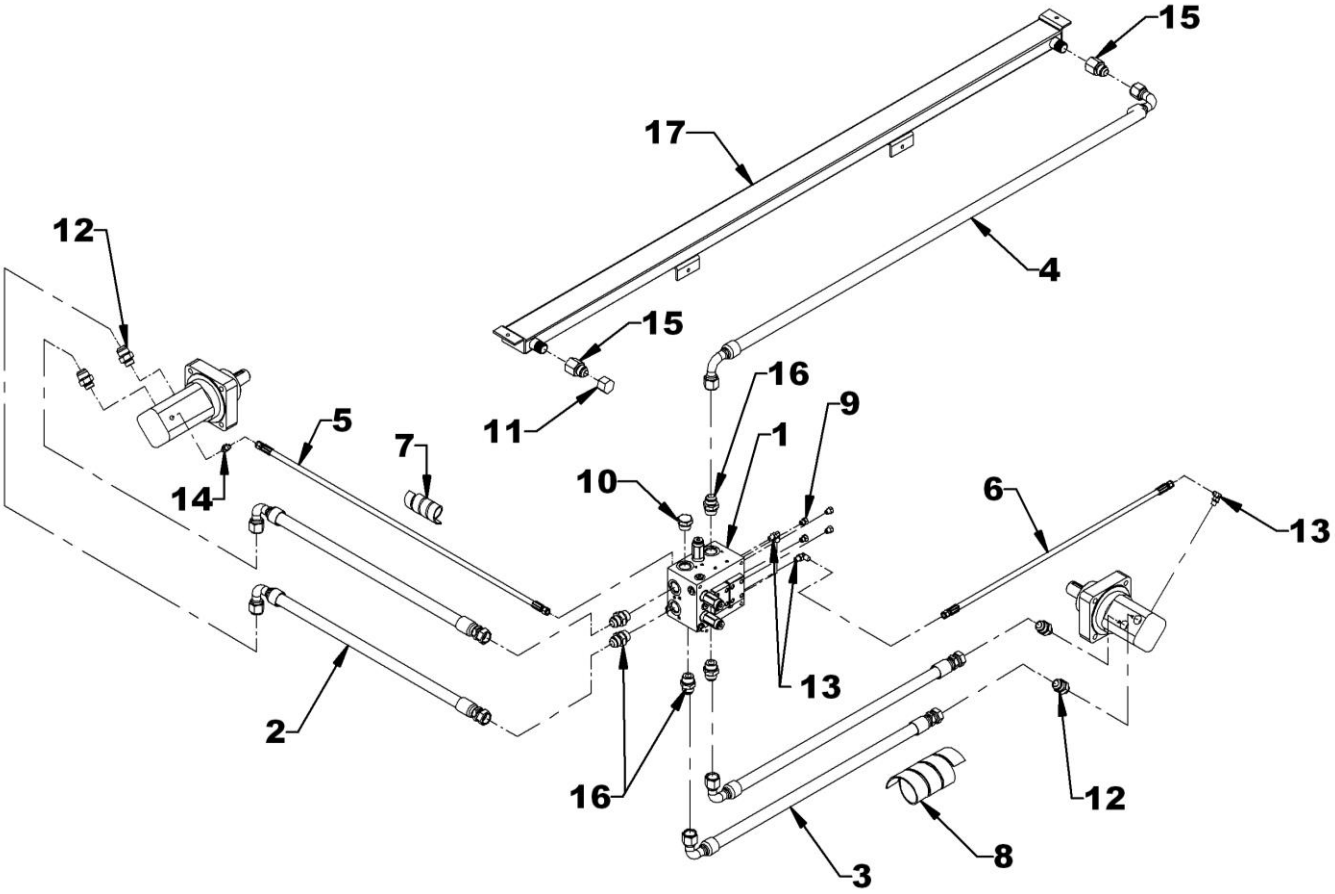

CHUTE – FOR H64A

REF.	DESCRIPTION	QTY	PART #
1	Chute ass'y with decals	1	669293
2	Chute	1	669294
3	Adjustment rod	1	654074
4	Adjustment tube	1	654076
5	Retaining plate	2	665399
6	Retaining plate	1	666574
7	Spacer 3/8" thick x 3/4" larg. x 2 1/2" lg	4	665957
8	Spacer 16GA thick x 3/4" larg. x 2.5 lg	4	666191
9	Rotation bushing	1	659151
10	Bolt hex. 5/16"NC x 1 1/4" gr.5, PTD	4	0100020
11	Serrated flange nut 5/16" NC, PTD	8	0900036
12	Carriage bolt 5/16"NC x 1 1/4" gr.5, PTD	4	0300004
13	Cotter pin 1/4" x 2" lg PTD	2	1500022
14	Round wire lock pin 1/4", PTD	1	1900006

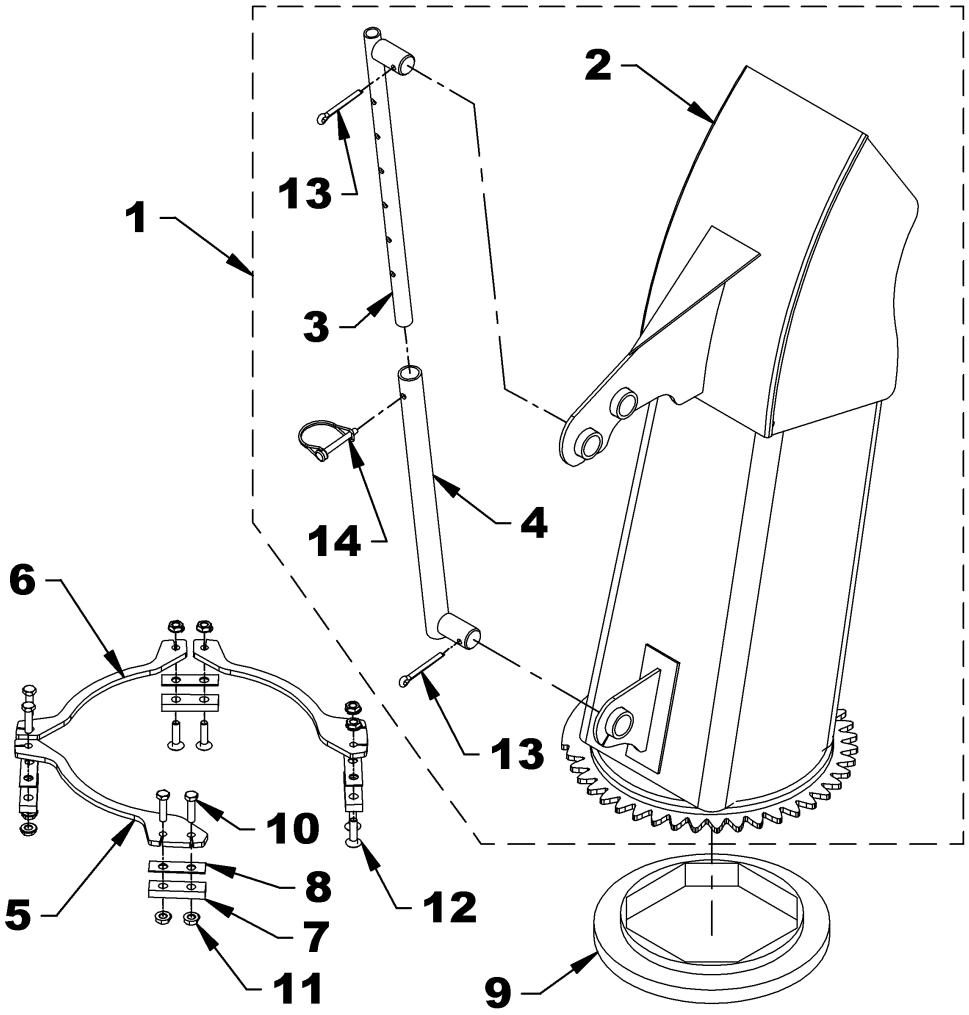

CHUTE – FOR H76A & H84A

REF.	DESCRIPTION	QTY	PART #
1	Chute ass'y with decals	1	669300
2	Chute	1	669176
3	Adjustment rod	1	654074
4	Adjustment tube	1	654076
5	Retaining plate	2	665935
6	Spacer 3/8" thick x 1.25" larg. x 4 1/2" lg	3	669178
7	Spacer 3/16" thick x 1.25" larg. x 4 1/2" lg	3	669179
8	Rotation bushing	1	662834
9	Carriage bolt 1/2"NC x 1 3/4" gr.5, PTD	6	0300025
10	Serrated flange nut 1/2" NC, PTD	6	0900046
11	Cotter pin 1/4" x 2" lg PTD	1	1500022
12	Round wire lock pin 1/4", PTD		1900006

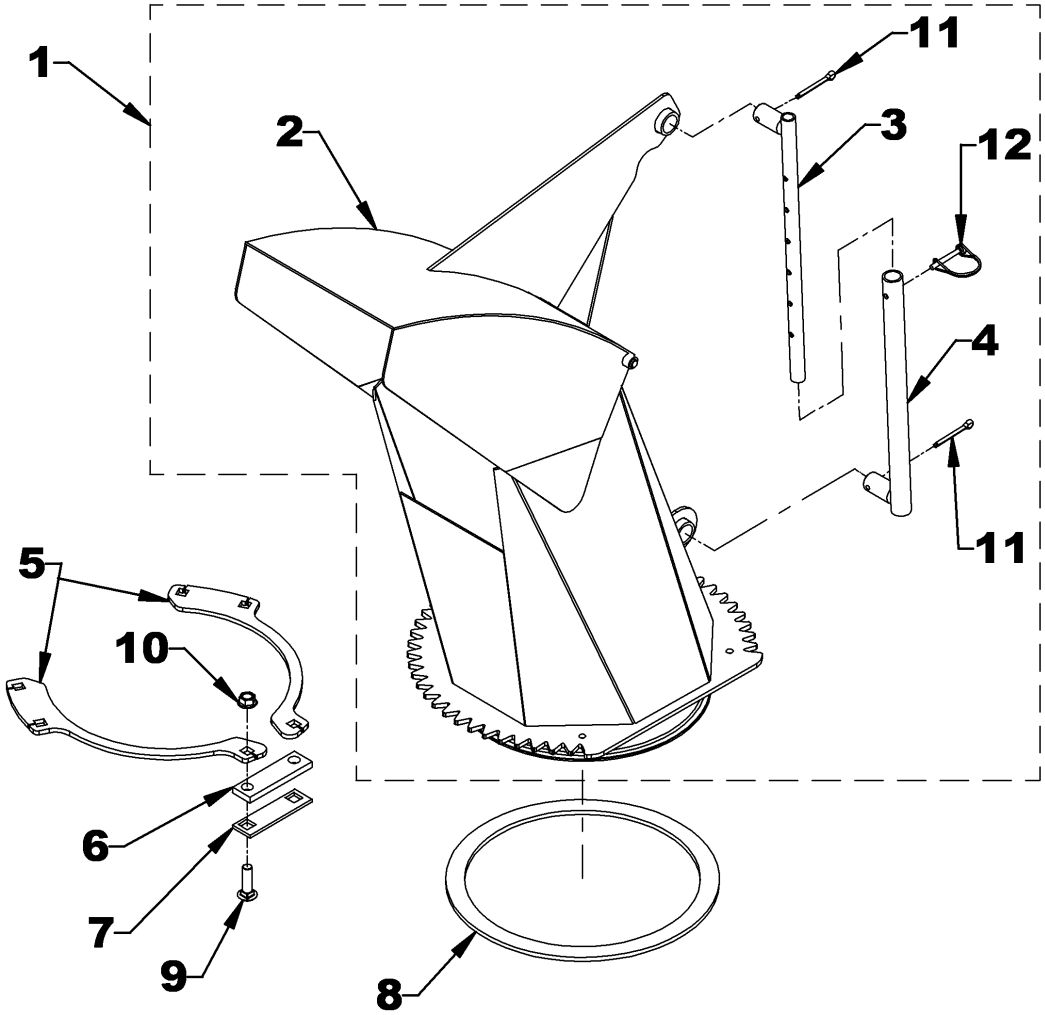

HYDRAULIC ROTATION

REF.	DESCRIPTION	QTY	PART #
1	Hydraulic motor 160cc with preset valve @ 1600PSI	1	3910023
	Seal kit for 3910023	1	3910028
2	Relief valve adjust @1600 PSI	1	3920031
3	O-ring 0.103" x 15/16" x 1 1/8" OD	2	3900463
4	Motor gear	1	665930
5	Anchoring plate	1	667338
6A	Gear shield for **H64A**	1	669295
6B	Gear shield for **H76A & H84A**	1	667929
7	Bolt hex. 1/4" NC x 3/4" gr.5, PTD	1	0100003
8	Bolt hex. 3/8" NC x 1 1/4" gr.5, PTD pour **H64A**	4	0100039
	Bolt hex. 3/8" NC x 1 1/2" gr.5, PTD pour **H76A & H84A**	4	0100040
9	Bolt hex. 3/8" NC x 1 1/2" gr.5, PTD	2	0100040
10	Allen socket head cap screw 5/16" NC x 1 1/2" gr.5, cylindr.	4	0800011
11	Serrated flange bolt 5/16" NC x 3/4" Gr.5 PTD, **H64A**	3	0200083
	Serrated flange bolt 5/16" NC x 3/4" Gr.5 PTD, **H76A & H84A**	4	0200083
12	Nut hex. 3/8" NC, PTD	2	0900003
13	Serrated flange nut 5/16" NC, PTD, **H64A**	3	0900036
	Serrated flange nut 5/16" NC, PTD, **H76A & H84A**	4	0900036
14	Lockwasher 1/4", PTD	1	1200002
15	Lockwasher 3/8", PTD	4	1200004
16	Flat washer 1/4" (5/16" hole), PTD	1	1400002
17	Flat washer 3/8" (7/16" hole), PTD	4	1400004
18	Key 1/4" x 1/4" x 1" lg	1	655379

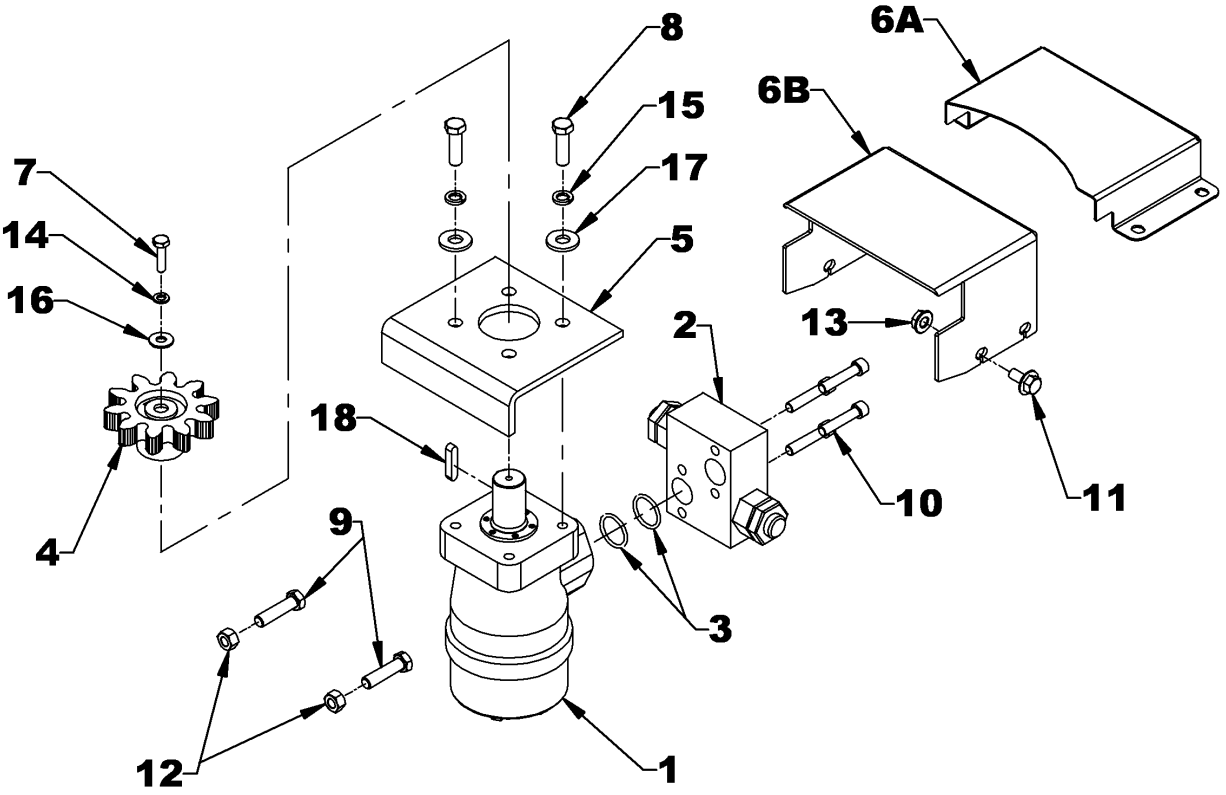

HYDRAULIC VALVE FOR CHUTE ROTATION – 8183A

REF.	DESCRIPTION	QTY	PART #
1	Elbow 90° 7/8" ORBM x 9/16 X 18 JICM	2	2600106
2	Hose 59" lg – 9/16" JIC SWF x 7/16" JIC SWF	2	3700165
3	Bolt hex. ø3/8"NC x 1 1/4" Gr.5 PTD	1	0100039
4	Hose clamp 1/4"	1	666583
5	Nylon insert locknut ø3/8"NC PTD	1	1000006
6	Elbow 90º 7/16 ORB M X 7/16 JIC M	2	2600065
7	Electric valve	1	3900027
8	Allen socket head cap screw 10-24 NC x 1 3/4" gr.5, black, cylindr.	4	0800018
9	O-ring 0.07" x 3/8" x 1/2" ext.	4	3900462
10	Hose plastic guard 4" lg.	1	669152
11	Switch box	1	669281
12	Switch with rotation decal	1	669255
13	Connector tap	1	656665
14	Female connector three cavity	1	4000066
15	Male terminal	3	663282
16	Electric harness 160"	1	4000078
17	Negative wire (black) 200"	1	669314
18	Positive wire (white) 200"	2	669313
19	Wire with fuse	1	666065
20	Loom 360"	1	669315

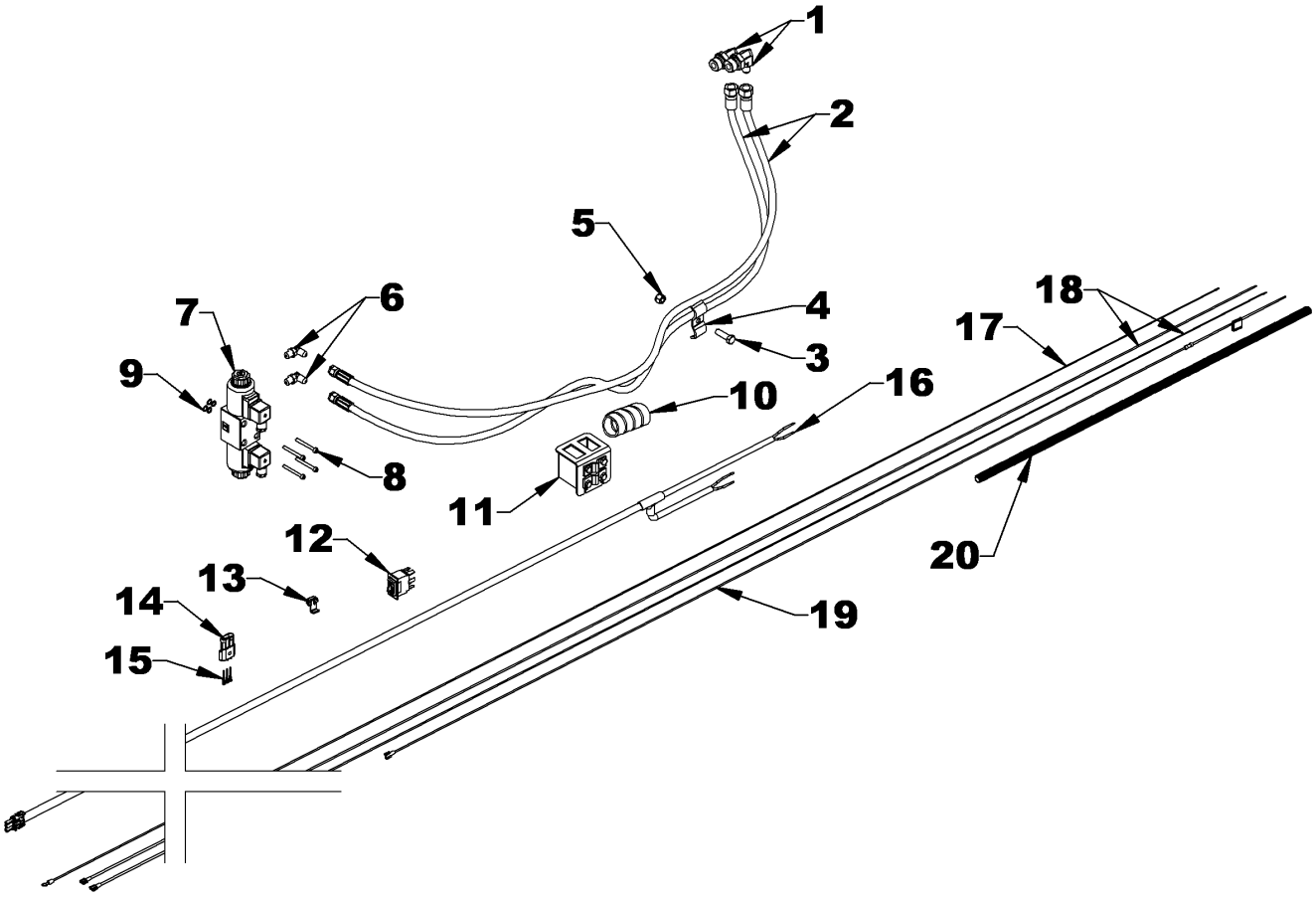

HYDRAULIC VALVE FOR HYDRAULIC DEFLECTOR – 8184A

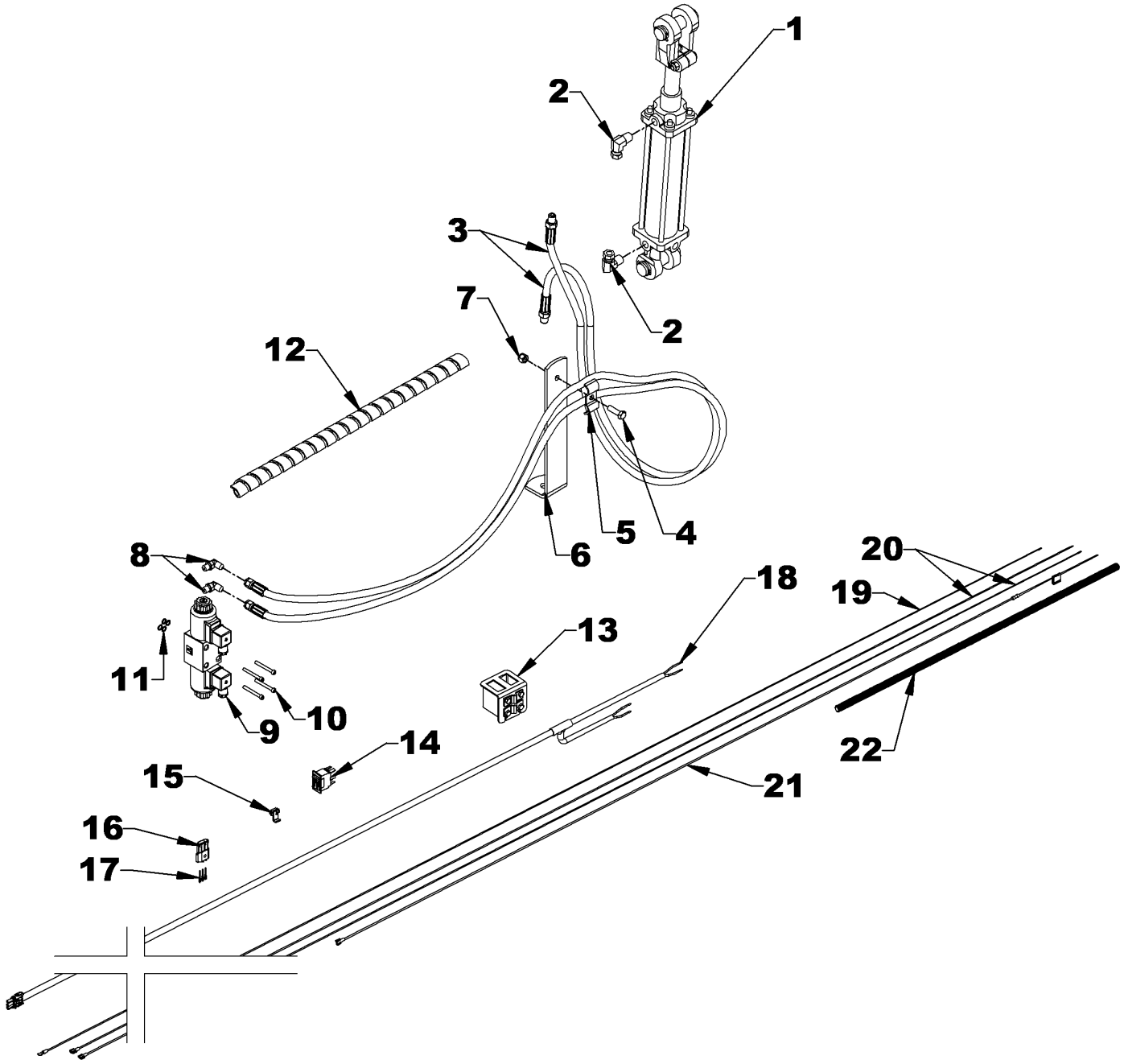

HYDRAULIC VALVE FOR HYDRAULIC DEFLECTOR – 8184A

REF.	DESCRIPTION	QTY	PART #
	Cylinder 8249 for H76A & H84A		
1	Cylinder 2" x 8"	1	3900022
	Seal kit - cylinder 3900022 (not illustrated)		3900205
	Cylinder 8155 for H64A		
1	Cylinder 2" x 6"	1	3900002
	Seal kit - cylinder 3900002 (not illustrated)		2600047
2	Elbow 90° 3/8" NPT M x 1/4" NPT SWF	2	654438
3	Hose 75" lg - 1/4"NPT SM x 7/16" JIC SWF	2	3700077
4	Bolt hex. ø3/8"NC x 1 1/4" Gr.5 PTD	1	0100039
5	Hose clamp 1/4"	1	666583
6	Hose support	1	669275
7	Nylon insert locknut ø3/8"NC PTD	1	1000006
8	Elbow 90º 7/16 ORB M X 7/16 JIC M	2	2600065
9	Electric valve	1	3900027
10	Allen socket head cap screw 10-24 NC x 1 3/4" gr.5, black, cylindr.	4	0800018
11	O-ring 0.07" x 3/8" x 1/2" ext.	4	3900462
12	Hose plastic guard 4" lg.	1	669152
13	Switch box	1	669281
14	Switch with rotation decal	1	669255
15	Connector tap	1	656665
16	Female connector three cavity	1	4000066
17	Male terminal	3	663282
18	Electric harness 160"	1	4000078
19	Negative wire (black) 200"	1	669314
20	Positive wire (white) 200"	2	669313
21	Wire with fuse	1	666065
22	Loom 360"	1	669315

UNIVERSAL HITCH – 8153

REF.	DESCRIPTION	QTY	PART #
1	Hitch	1	665881
2	Hitch arm	2	665882
3	Upper bracket	1	665883
4	Bolt hex. 3/4" NC x 6", PTD gr.5	2	0100128
5	Bolt hex. 3/4" NC x 3 1/2", PTD gr.5	2	0100122
6	Bolt hex. 5/8" NC x 2", PTD gr.5	2	0100095
7	Lockwasher 5/8", PTD	2	1200007
8	Nut hex. 5/8" NC, PTD	2	0900007
9	Lockwasher 3/4", PTD	4	1200008
10	Nut hex. 3/4" NC, PTD	4	0900008

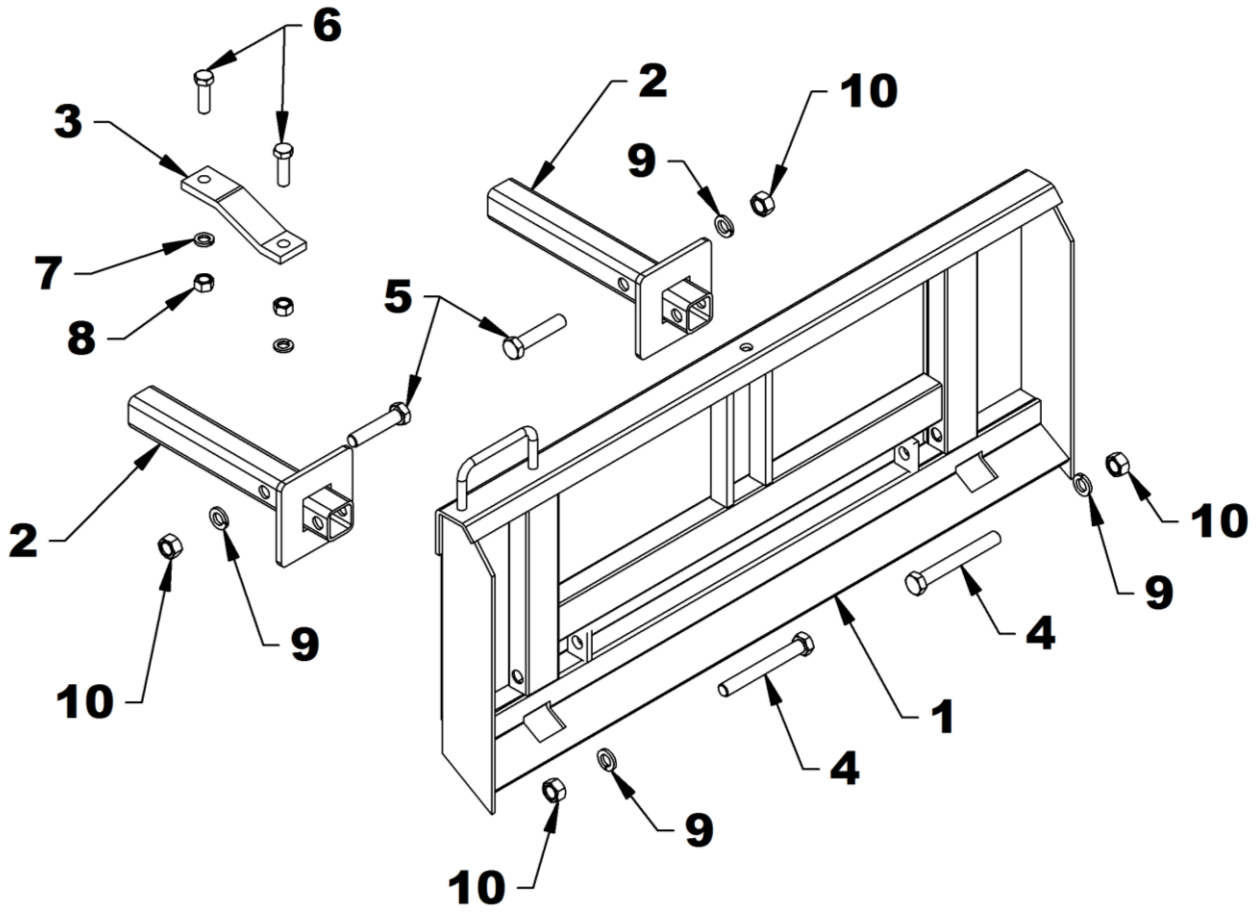

DRIFT CUTTERS – 8152

REF.	DESCRIPTION	QTY	PART #
1	Left drift cutter	1	665874
2	Right drift cutter	1	665879
3	Bolt hex. 3/8"NC x 1", PTD, gr.5	2	0100038
4	Bolt hex. 5/16"NC x 1", PTD, gr.5	1	0100019
5	Bolt hex 1/2"NC x 1 1/4", PTD, gr.5	1	0100069
6	Lockwasher 3/8", PTD	2	1200004
7	Lockwasher 5/16", PTD	1	1200003
8	Lockwasher 1/2", PTD	1	1200006
9	Nut hex. 3/8"NC, PTD	2	0900003
10	Nut hex. 5/16"NC, PTD	1	0900002
11	Nut hex. 1/2"NC, PTD	1	0900006

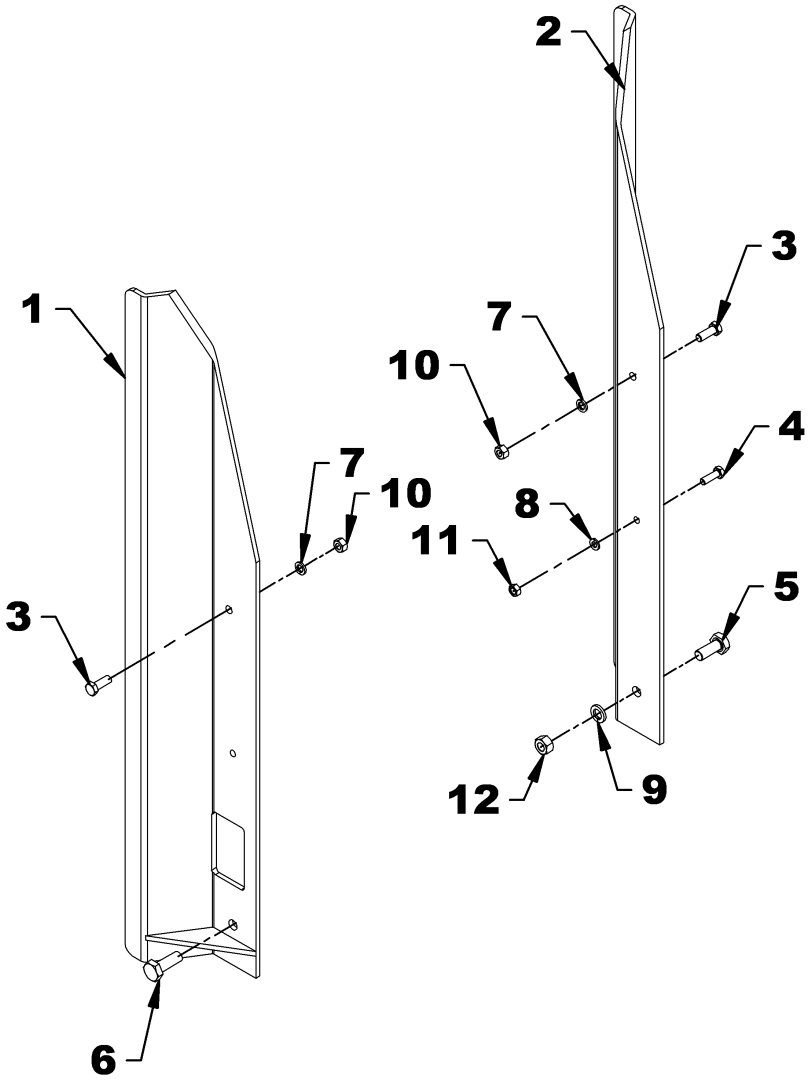

ELECTRIC DEFLECTOR – 8154

REF.	DESCRIPTION	QTY	PART #
1	Electric actuator	1	665573
2	Switch box	1	666048
3	Switch	1	663383
4	Rubber cap	1	658666
5	Plastic cap	1	662530
6	Clevis – rod end	1	666049
7	Clevis – fixed end	1	666051
8	Pin 1"	2	666057
9	Ground wire 72" (black)	1	666054
10	Tap connector	1	656665
11	Fuse wire 72" (red)	1	666055
12	Actuator wire	1	666056
13	Spring pin 3/16" x 1 3/4", PTD	2	1600009
14	Hairpin 4mm x 80mm, PTD	2	1800002
15	Self-drilling screw #10 x 1/2", PTD	4	3200011
16	Bolt hex. 1/2"NC x 2 1/2", PTD	2	0100076
17	Nylon insert locknut 1/2"NC, PTD	2	1000011
18	Loom	1	666053

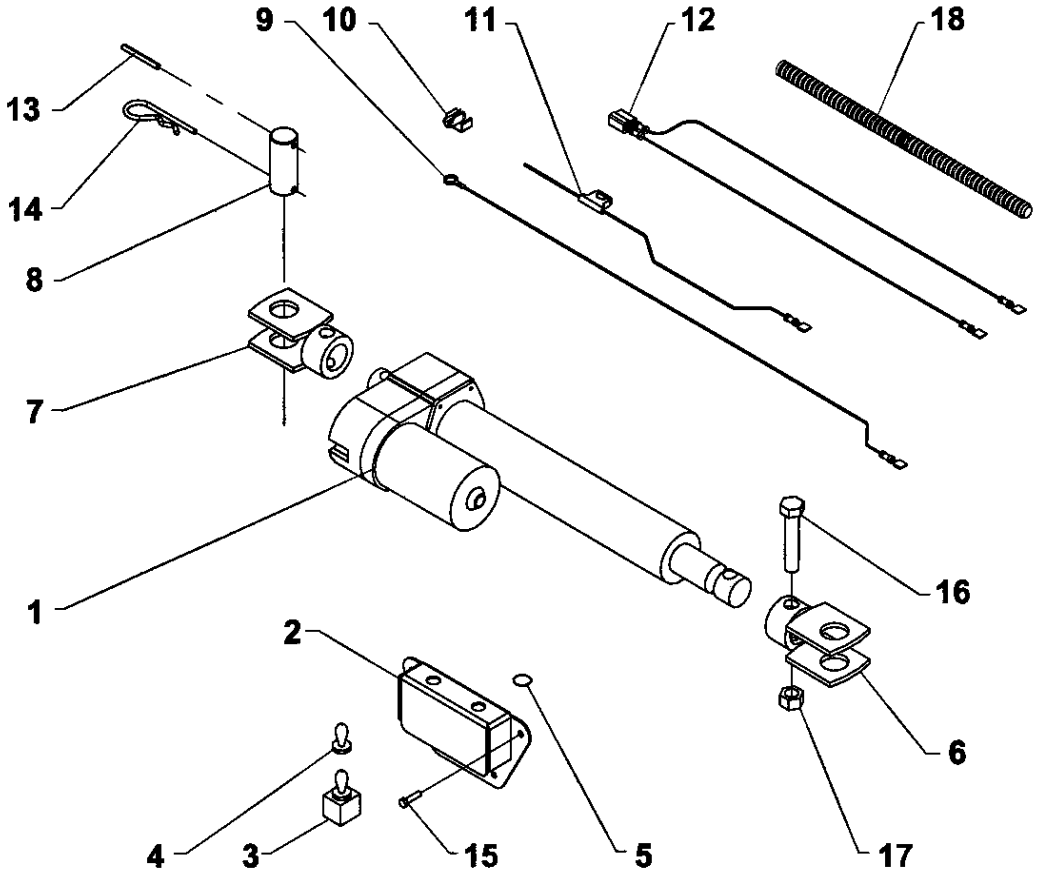

SWITCH BOX KIT- 669285

REF.	DESCRIPTION	QTY	PART #
1	Switch box assembly	1	669285
2	Switch box	1	669281
3	Switch box clamp	2	667558
4	Bolt hex. ø1/4"NC x 3/4" gr.5 PTD	4	0100003

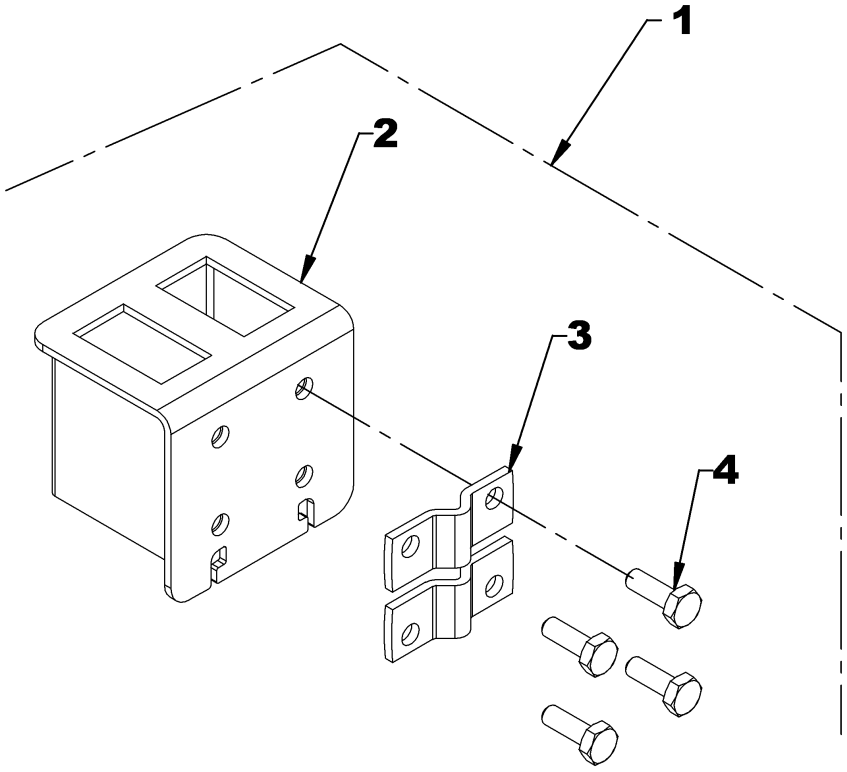

HYDRAULIC MOTORS – 3910021, 3910022, 3910058 & 3910059

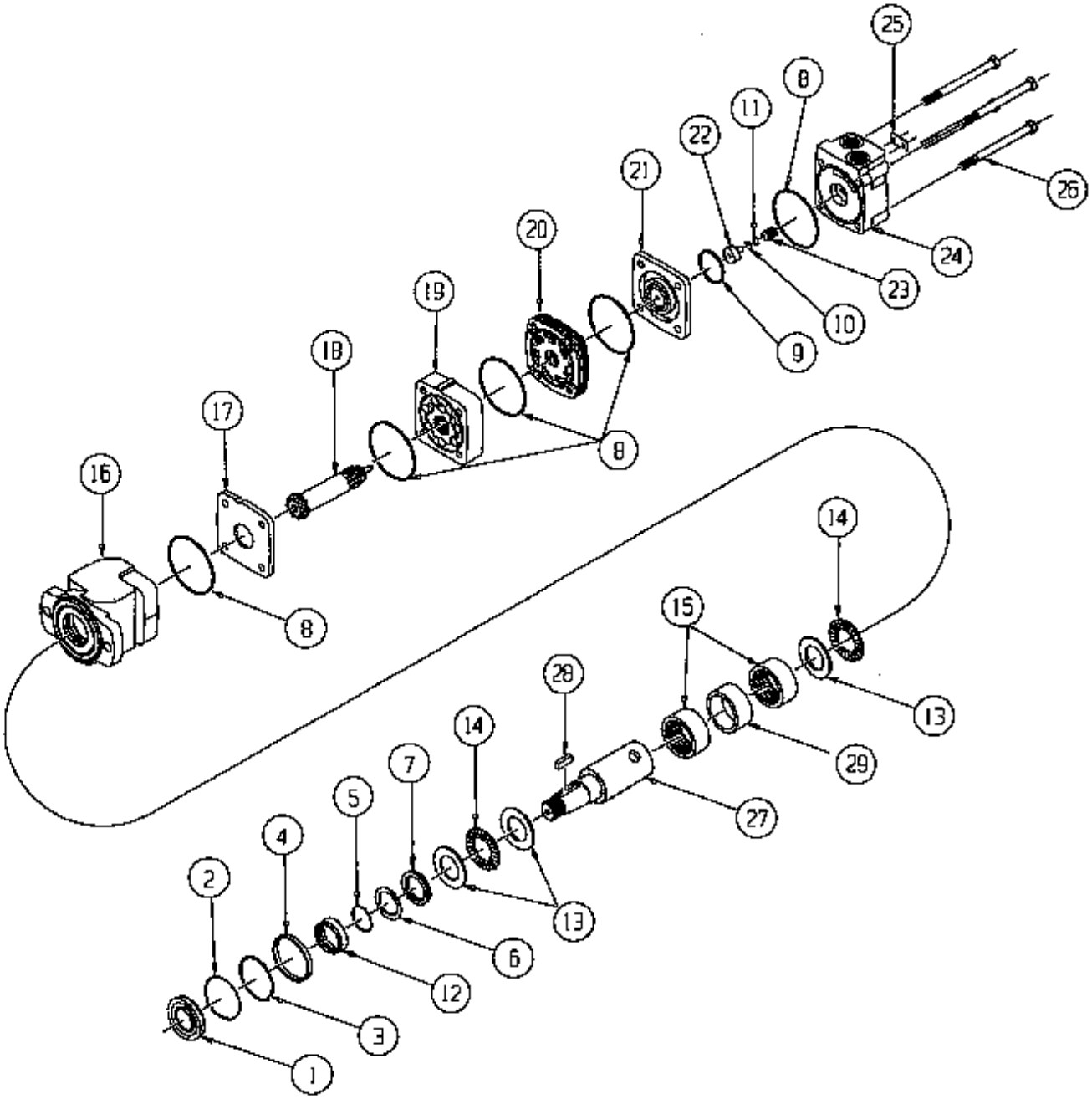

HYDRAULIC MOTORS – 3910021, 3910022, 3910058 & 3910059

REF.	DESCRIPTION	QTY	PART #
	Seal Kit (Includes #1 to 11)		3900042
1	Dust seal	1	-----
2	Retaining ring	1	-----
3	Backup shim	1	-----
4	High pressure seal	1	-----
5	Backup shim	1	-----
6	Teflon backup seal	1	-----
7	Shaft seal	1	-----
8	Body seal	5	-----
9	Collector seal	1	-----
10	O-Ring seal	1	-----
11	Teflon backup seal	1	-----
12	Seal carrier	1	3900132
13	Thrust washer	3	3900044
14	Thrust bearing	2	3900045
15	Housing bearing	2	3900046
16	Housing Kit, (includes #13-14-15-29)	1	3900047
17	Wear plate	1	3900133
18	Drive link kit for 3910021	1	3900049
	Drive link kit for 3910022	1	3900051
	Drive link kit for 3910058	1	3900048
	Drive link kit for 3910059	1	3900050
19	Rotor for 3910021	1	3900053
	Rotor for 3910022	1	3900055
	Rotor for 3910058	1	3900052
	Rotor for 3910059	1	3900054
20	Collector	1	3900056
21	Commutator assembly	1	3900057
22	End cover piston	1	3900059
23	Piston spring	1	3900060
24	End cover (includes #10-11-22-23)	1	3900063
25	Serial number plate	1	---
26	Bolt set kit (4) for 3910021	1	3900065
	Bolt set kit (4) for 3910022	1	3900067
	Bolt set kit (4) for 3910058	1	3900064
	Bolt set kit (4) for 3910059	1	3900066
27	Shaft 1 1/4"	1	3900068
28	Key	1	3900069
29	Bearing spacer	1	3900071

WARRANTY

RADTECH warrants to the original buyer that the equipment is free from defects in material and workmanship. RADTECH's obligation, under this warranty, will be limited to the repair or replacement of any non-wear part or component, which RADTECH finds to be defective within **one year** from the date of original purchase (unless otherwise-specified). The applicable warranty period for commercial or rental use shall be ninety (90) days from the date of purchase

In no event shall RADTECH be liable for consequential, special, direct or indirect damages incurred by the buyer/user.

All components not manufactured by RADTECH (such as motors, actuators, hydraulic components, tires, ...etc.) are covered by the original manufacturer's warranty in conjunction with RADTECH

RADTECH's obligation under this warranty shall be limited to repairing or replacing, free of charge to the original purchaser, any part that, in RADTECH's judgment, shall show evidence of such defect, provided the **distributor** returns the part prepaid within thirty (30) days from date of failure.

This warranty shall not be interpreted to render RADTECH liable for injuries or damages of any kind or nature to person or property. This warranty does not extend to losses because of delays, or to any expenses or losses incurred for labor, substitute machinery, rental or for any other reason.

Except as set forth above, RADTECH shall have no obligation or liability of any kind on account of any of its equipment and shall not be liable for special or consequential damages. RADTECH makes no other warranty, expressed or implied, and specifically, RADTECH disclaims any implied warranty or merchantability or fitness for a particular purpose**. Some states or provinces do not permit limitations or exclusions of implied warranties or incidental or consequential damages, so the limitations or exclusions in this warranty may not apply.**

This warranty is subject to any existing conditions of supply, which may directly affect our ability to obtain materials or manufacture replacement parts. RADTECH reserves the right to make improvements in design or changes in specifications at any time, without incurring any obligation to owners of units previously sold.

No one is authorized to alter, modify or enlarge this warranty nor the exclusions, limitations and reservations.

2835 Chemin de l'Aéroport, Thetford Mines (Québec) G6G 5R7

T +1 418 338-4499 - F +1 418 338-2522

info@radtech.ca
radtech.ca

TORQUE SPECIFICATION TABLE

GENERAL SPECIFICATION TABLE

USE THE FOLLOWING TORQUES WHEN SPECIAL TORQUES ARE NOT GIVEN

Note:These values apply to fasteners as received from supplier dry, or when lubricated with normal engine oil. They do not apply if special graphited or moly sidulphide greases or other extreme pressure lubricants are used. These values apply to dry conditions; under lubricated conditions reduce by 25% the torques in this table.

BOLT HEAD IDENTIFICATION

INCHES Bolt Size	Grade 2		Grade 5		Grade 8	
in-tpi [1]	**N-m [2]**	**lbs-ft [3]**	**N-m**	**lbs-ft**	**N-m**	**lbs-ft**
1/4" – 20NC	7.4	5.6	11	8	16	12
1/4" – 28NF	8.5	6	13	10	18	14
5/16" – 18NC	15	11	24	17	33	25
5/16" – 24NF	17	13	26	19	37	27
3/8" – 16NC	27	20	42	31	59	44
3/8" – 24NF	31	22	47	35	67	49
7/16" – 14NC	43	32	67	49	95	70
7/16" – 20NF	49	36	75	55	105	78
1/2" – 13NC	66	49	105	76	145	105
1/2" – 20NF	75	55	115	85	165	120
9/16" – 12NC	95	70	150	110	210	155
9/16" – 18NF	105	79	165	120	235	170
5/8" – 11NC	130	97	205	150	285	210
5/8" – 18NF	150	110	230	170	325	240
3/4" – 10NC	235	170	360	265	510	375
3/4" – 16NF	260	190	405	295	570	420
7/8" – 9NC	225	165	585	430	820	605
7/8" – 14NF	250	185	640	475	905	670
1" – 8NC	340	250	875	645	1230	910
1" – 12NF	370	275	955	705	1350	995
1 1/8" – 7NC	480	355	1080	795	1750	1290
1 1/8" – 12NF	540	395	1210	890	1960	1440
1 1/4" – 7NC	680	500	1520	1120	2460	1820
1 1/4" – 12NF	750	555	1680	1240	2730	2010
1 3/8" – 6NC	890	655	1990	1470	3230	2380
1 3/8" – 12NF	1010	745	2270	1670	3680	2710
1 1/2" – 6NC	1180	870	2640	1950	4290	3160
1 1/2" – 12NF	1330	980	2970	2190	4820	3560

METRIC Bolt Size	5.8 Class 5.8		8.8 Class 8.8		NP 10.9 Class 10.9	
mm$_x$pitch [4]	**N-m**	**lbs-ft**	**N-m**	**lbs-ft**	**N-m**	**lbs-ft**
M 5 X 0.8	4	3	6	5	9	7
M 6 X 1	7	5	11	8	15	11
M 8 X 1.25	17	12	26	19	36	27
M 8 X 1	18	13	28	21	39	29
M10 X 1.5	33	24	52	39	72	53
M10 X 0.75	39	29	61	45	85	62
M12 X 1.75	58	42	91	67	125	93
M12 X 1.5	60	44	95	70	130	97
M12 X 1	90	66	105	77	145	105
M14 X 2	92	68	145	105	200	150
M14 X 1.5	99	73	155	115	215	160
M16 X 2	145	105	225	165	315	230
M16 X 1.5	155	115	240	180	335	245
M18 X 2.5	195	145	310	230	405	300
M18 X 1.5	220	165	350	260	485	355
M20 X 2.5	280	205	440	325	610	450
M20 X 1.5	310	230	650	480	900	665
M24 X 3	480	355	760	560	1050	780
M24 X 2	525	390	830	610	1150	845
M30 X 3.5	960	705	1510	1120	2100	1550
M30 X 2	1060	785	1680	1240	2320	1710
M36 X 3.5	1730	1270	2650	1950	3660	2700
M36 X 2	1880	1380	2960	2190	4100	3220

[1] in-tpi = nominal thread diameter in inches-threads per inch

[2] N-m = newton-meters

[3] lbs-ft= pounds-foot

[4] mm x pitch = nominal thread diameter in millimeters x thread Pitch

*Torque tolerance +0%, -15% of torquing values. Unless otherwise specified use torque values listed above

***NOTE**: 1 lbs-ft = 12 lbs-in

ADAPTER INSTALLATION PROCESS

NPT THREAD IDENTIFICATION & TORQUE

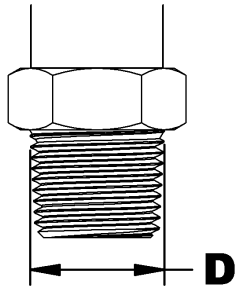

D		Identification of adapter	Number of turns to do after manual tightening
in	mm		
0.375	9.5	1/8 NPT	2.0 - 3.0
0.500	12.5	1/4 NPT	2.0 - 3.0
0.625	15.9	3/8 NPT	2.0 - 3.0
0.780	19.8	1/2 NPT	2.0 - 3.0
0.988	25.1	3/4 NPT	2.0 - 3.0
1.236	31.4	1 NPT	1.5 - 2.5
1.583	40.2	1 1/4 NPT	1.5 - 2.5
1.823	46.3	1 1/2 NPT	1.5 - 2.5

RECOMMENDED ASSEMBLY

The method used to assemble fittings with NPT threads is done in two stages. First firmly tighten by hand then tighten once again according to the number of turns listed in the above table. The following steps are recommended to minimize the risks of leaks and/or damages to the parts.

STEP 1: Inspect threads and tapping to make sure they are clean.

STEP 2: Measure the diameter (D) of the adapter and take note of the size taken.

STEP 3: Apply a sealant/lubricant product to the NPT threads (teflon covered threads are preferable to other lubricating products). If PTFE tape (teflon) is used, make between 1.5 or 2 turns clockwise, when viewed by the fitting end, keeping free the two first threads.

CAUTION: More than 2 turns can cause distortion or cracks in the orifice.

STEP 4: Tighten the fitting manually.

STEP 5: Screw the fitting the number of turns listed on the above table making sure that in the case of an elbow fitting the end is aligned to the desired position to connect the tube or hose. **Never unscrew a fitting to obtain the proper alignment.**

STEP 6: If a leak is detected after having followed the preceding instructions, check that the threads are not damaged and the number of seated threads is fulfilled (see details in next paragraph).

If the threads are damaged, replace the fitting. If the tapping is damaged, retap if possible or replace the part.

Usually, the number of threads seated is between 3.5 and 6. If the range is different it would indicate that the fitting was tightened too much or not enough or that the tightening was not within thread tolerances. If the fitting is not tight enough, tighten but never more than one turn. If it's too tight, inspect the threading and tapping and replace the section that has threads that are not within tolerances.

JIC THREAD IDENTIFICATION & TORQUE

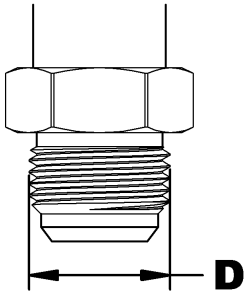

D		Identification of adapter	TORQUE	
in	mm		lbs-ft	N-m
-	-	5/16 JIC	6-7	8-10
-	-	3/8 JIC	6-9	8-12
0.433	11	7/16 JIC	9-12	12-16
0.496	12.6	1/2 JIC	14-15	19-21
0.559	14.2	9/16 JIC	18-20	24-27
0.740	18.8	3/4 JIC	27-39	37-53
0.870	22.1	7/8 JIC	36-63	49-85
1.055	26.8	1 1/16 JIC	65-88	88-119
1.185	30.1	1 3/16 JIC	75-103	102-140
1.307	33.2	1 5/16 JIC	85-113	115-153
1.618	41.1	1 5/8 JIC	115-133	156-180
1.870	47.5	1 7/8 JIC	125-167	169-226
2.492	63.3	2 1/2 JIC	190-258	258-350

JIC flare fittings seal with metal to metal contact between the flared nose of the fitting and the flared tube face in the female connection.

The minimum torque values listed are to provide a benchmark that give optimum results for leak free connections. Actual torque values should be based on individual application.

NOTE: Do not apply thread sealant (teflon tape) on the JIC threads.

Leaks can result from vibration, thermal cycling and from loads being supported by the connection (i.e. using the fitting in the connection to support mechanical loads).

IMPORTANT: Use the lowest torque value from the chart when wet torquing.

RECOMMENDED ASSEMBLY

STEP 1: Inspect for possible contamination or damage from shipping or handling. Sealing surface should be smooth.

STEP 2: Lubricate the threads and the entire surface of the cone with hydraulic fluid or a light lubricant.

STEP 3: Align mating components for hand connection and turn flare nut until sealing surfaces make full contact.

STEP 4: Torque nut to the values shown in the above table.

STEP 5: When torquing nut onto a straight flared fitting, it may be necessary to also place a wrench on the flared fitting wrench pad to prevent it from turning during assembly.

ALTERNATE ASSEMBLY METHOD

STEP 1: Inspect for possible contamination or damage from shipping or handling. Sealing surface should be smooth.

STEP 2: Lubricate the threads and the entire surface of the cone with hydraulic fluid or a light lubricant.

STEP 3: Align mating components for hand connection and turn flare nut until sealing surfaces make full contact.

STEP 4: Lightly wrench tighten the nut until there is resistance.

STEP 5: Place a wrench on wrench pad next to nut as near the 6 o'clock position as possible.

STEP 6: Place second wrench on nut as near the 3 o'clock position as possible.

STEP 7: Turn nut clockwise to no less than the 4 o'clock position, but no more than the 6 o'clock position. Required rotation generally decreases as size increases.

ORB (O-RING BOSS) THREAD IDENTIFICATION & TORQUE

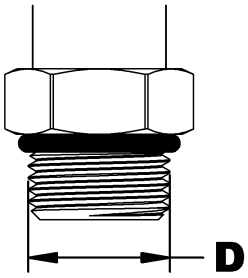

D		Identification of adapter	TORQUE	
in	mm		lbs-ft	N-m
-		3/8 ORB	8-9	12-13
0.433	11	7/16 ORB	13-15	18-20
0.496	12.6	1/2 ORB	14-15	19-21
0.559	14.2	9/16 ORB	23-24	32-33
0.740	18.8	3/4 ORB	40-43	55-57
0.870	22.1	7/8 ORB	43-48	59-64
1.055	26.8	1 1/16 ORB	68-75	93-101
1.185	30.1	1 3/16 ORB	83-90	113-122
1.307	33.2	1 5/16 ORB	112-123	152-166
1.618	41.1	1 5/8 ORB	146-161	198-218
1.870	47.5	1 7/8 ORB	154-170	209-230
2.492	63.3	2 1/2 ORB	218-240	296-325

SAE O-rings (O-Ring Boss) are straight thread fittings that seal using an O-ring between the thread and the wrench flats of the fitting. The O-ring seals against the machined seat on the female port.

O-ring fittings can be either adjustable or non-adjustable. Nonadjustable fittings are screwed into a port where no alignment is needed. Adjustable fittings can be oriented in a specific direction.

Fittings with O-rings offer advantages over metal-to-metal fittings. Under or over-tightening any fitting can allow leakage, but all-metal fittings are more susceptible to leakage because they must be tightened to a higher and narrower torque range. This makes it easier to strip threads or crack or distort fitting components, which prevents proper sealing.

NOTE: Do not apply thread sealant (teflon tape) on the ORB threads.

Leaks can also result from vibration, thermal cycling and from loads being supported by the connection (i.e. using the fitting in the connection to support mechanical loads).

IMPORTANT: Use the lowest torque value from the chart when wet torquing.

RECOMMENDED ASSEMBLY ORB (O-RING) NON-ADJUSTABLE

STEP 1: Inspect all components for damage or contamination.

STEP 2: Lubricate O-ring and threads on fitting with the same hydraulic fluid used in the tractor.

STEP 3: Turn fitting into port until finger tight, then torque to the value shown in the following table.

NOTE: Use the lowest torque value from the chart when wet torquing.

RECOMMENDED ASSEMBLY ORB (O-RING) ADJUSTABLE

STEP 1: Inspect all components for damage or contamination.

STEP 2: Lubricate O-ring and threads on fitting with the same hydraulic fluid used in the tractor.

STEP 3: Looking at fitting from the male ORB end, turn manually the nut as far as possible from the O-ring.

STEP 4: Using wrench, turn fitting into port until the washer touches thread nearest wrench pad.

STEP 5: Back off fitting counterclockwise not exceeding one revolution until it is oriented in the correct position.

STEP 6 : Place wrench on the wrench pad of fitting to prevent fitting from turning, and torque nut to the value shown in the above table.

Manufactured by:

RAD TECHNOLOGIES INC.
Division Thetford Mines
2835, Chemin de l'Aéroport
Thetford Mines, Québec, Canada, G6G 5R7
Tel.: (418) 338-4499 - Fax.: (418) 338-6090
E-mail : radtech@radinter.com
Internet : www.radinter.com

Printed in Canada